1251 – Plaster Wall Light

1

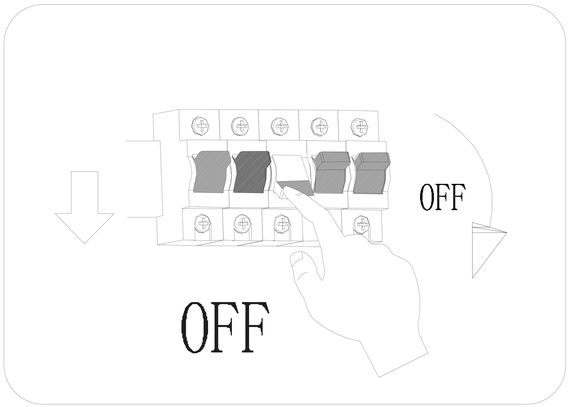

2

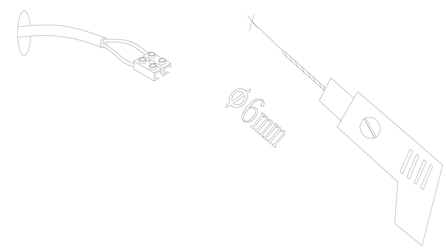

3

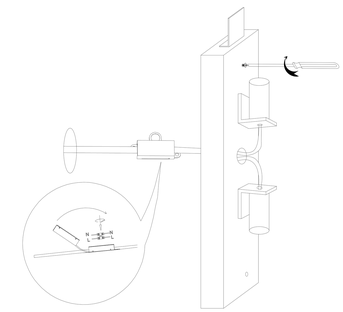

4

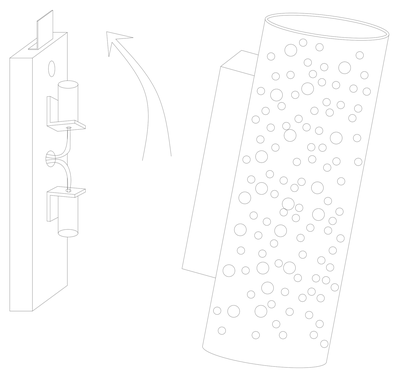

5

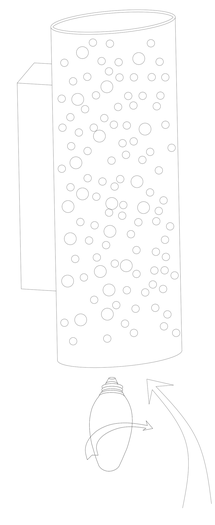
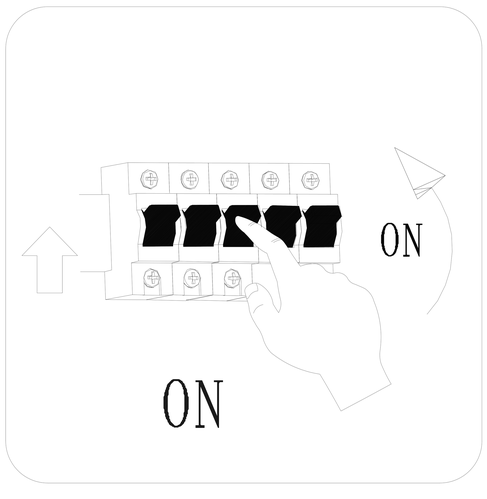
6